Perma-Column Design and Use Guide

for

PC6300, PC6400, PC6600,
PC8300, and PC8400 Models

timbertech
ENGINEERING

by
Brent Leatherman, P.E.
Timber Tech Engineering, Inc
E-Mail: bl@timbertecheng.com

April 18, 2005

East: 22 Denver Road, Suite B Denver, PA 17517
717.335.2750 Fax: 717.335.2753

West: 206 S. Main St, P.O. Box 509 Kouts, IN 46347
219.766.2499 Fax: 219.766.2394

www.timbertecheng.com

Table of Contents

1. Design Overview……Page 2
2. Perma Column Descriptions……...Page 2
3. Reinforced Concrete Design……...Page 3
4. Steel Bracket Design……...Page 3
5. Mechanically Laminated Wood Column Design…....Page 5
6. Modeling…….....Page 6
7. Perma Column Design Charts……Page 7
8. Design Example……..Page 9
9. Wind Uplift Capacity……..Page 11
10. Summary and Conclusion……...Page 13

Foreword

The following *Design and Use Guide for PC6300, PC6400, PC6600, PC8300, and PC8400 Models* has been written by Brent Leatherman to help engineers apply information appearing in the *Engineering Design Manual for Series 6300, 6400, 8300, 8400 Perma-Columns*. I wrote the latter document after conducting a number of tests on Perma-Columns in my laboratory at the University of Wisconsin-Madison. In addition to a summary of UW-Madison test results, the *Engineering Design Manual* contains details on how to calculate design properties for Perma-Columns. The *Design and Use Guide* reviews these procedures, and contains sample calculations and comparisons that you will not find in the *Engineering Design Manual*.

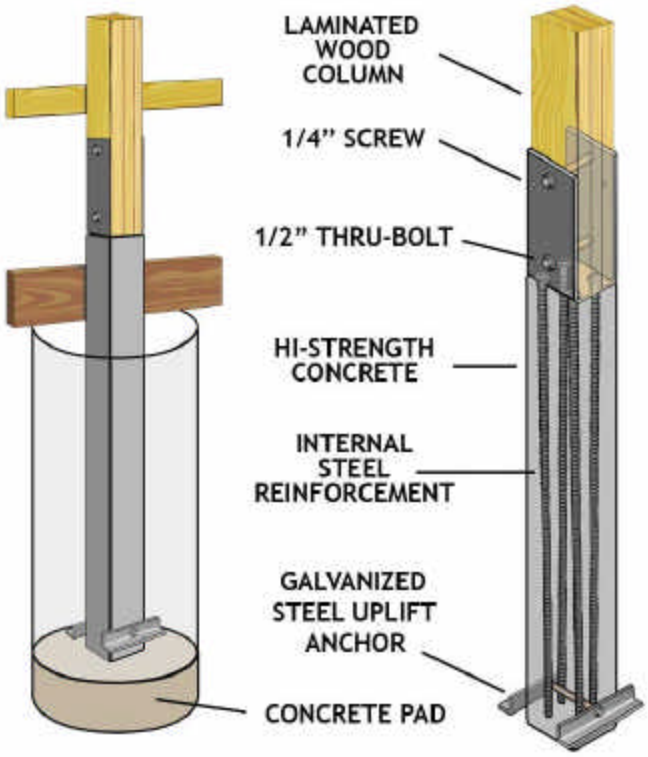

Perma-Columns are a more environmentally-friendly alternative to preservative-treated wood, and quite likely, a more durable alternative. Using the information contained in this document and in the *Engineering Design Manual*, an engineer can better ensure the structural integrity and safety of buildings incorporating Perma-Columns.

David R. Bohnhoff, Ph.D., P.E.

1. Design Overview

This guide is intended to be used as a companion document to the *Engineering Design Manual for Series 6300, 6400, 8300, 8400 Perma-Columns* (herein referred to as "the Manual") by David R. Bohnhoff. Each ***Perma-Column*** assembly consists of a reinforced concrete base designed according to The American Concrete Institute (ACI), a steel bracket designed according to The American Institute of Steel Construction (AISC), and a mechanically laminated wood column designed according to The American Forest and Paper Association (AF&PA) specifications. The structural analysis for each of these components was performed using a load and resistance factor (LRFD) design methodology. This was done to allow use of one set of load combinations for the entire assembly, and to provide an accurate look at column failure modes. The deflection limits used in this design were taken from *IBC 2003 Table 1604.3* for exterior walls with brittle or flexible finishes, and are L/240 and L/120, respectively. The overall column deflection is to be checked using service (unfactored) loads.

This guide will cover properties, and design issues for the reinforced concrete base, the steel bracket connection, and the mechanically laminated wood columns. We will look at creating models of the ***Perma-Column*** assemblies to simulate the results of laboratory testing. Design charts will be presented for all the ***Perma-Column*** assemblies with varying heights, and boundary conditions. The failure modes and design limitations on each ***Perma-Column*** assembly will be discussed, and we will give an example showing a straight forward design approach which can be applied to all ***Perma-Column*** assemblies. Finally, we will look at wind uplift capacity for a concrete collar or a packed fill foundation condition.

2. Perma-Column Descriptions

Dimensions and material properties for the PC6300, PC6400, PC6600, PC8300, and PC8400 models are given in Table 2.1. The PC6600 model is intended for new or replacement solid-sawn 6x6 posts and was not included in the laboratory testing. Variable definitions correspond to Figure 1.1 of the Manual. Section properties for 3-ply 2x6, 4-ply 2x6, 3-ply 2x8, and 4-ply 2x8 mechanically laminated wood columns are given in Table 3.5.1 of the Manual.

Table 2.1: PC6300, PC6400, PC6600, PC8300, and PC8400 Dimensions and Properties

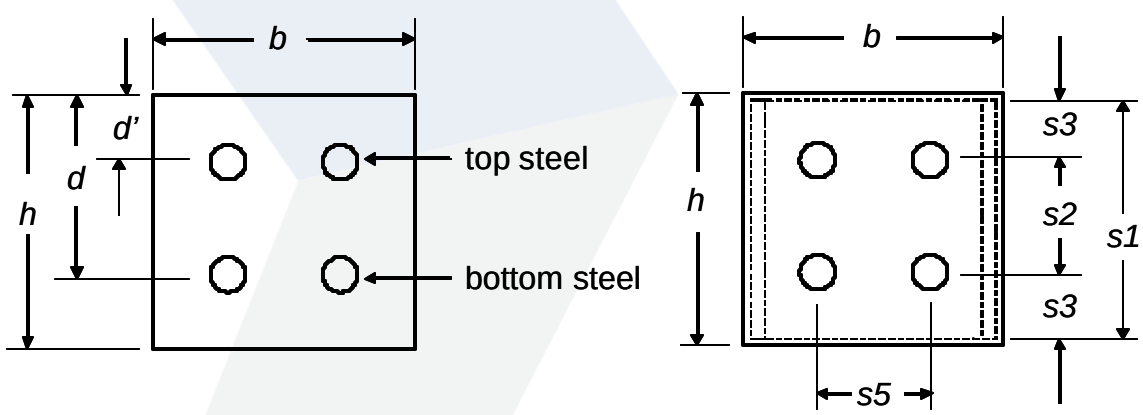

Variable	Symbol	Units	PC6300	PC6400	PC8300	PC8400	PC6600
Overall Concrete Width	b	in.	5.38	6.88	5.38	6.88	6.38
Overall Concrete Depth	h	in.	5.44	5.44	7.19	7.19	5.44
Depth to Top Steel	d'	in.	1.50	1.50	1.56	1.56	1.50
Depth to Bottom Steel	d	in.	3.94	3.94	5.62	5.62	3.94
Width of Steel Bracket	$s1$	in.	5.00	5.00	7.00	7.00	5.00
Top & Bottom Steel Spacing	$s2$	in.	2.44	2.44	4.06	4.06	2.44
Steel Distance to Bracket Edge	$s3$	in.	1.28	1.28	1.47	1.47	1.28
Area of Top Steel	A_s'	in.^{2}	0.40	0.40	0.62	0.62	0.40
Area of Bottom Steel	A_s	in.^{2}	0.40	0.40	0.62	0.62	0.40
Steel Yield Strength	f_y	lbf/in.^{2}	60,000	60,000	60,000	60,000	60,000
Concrete Compressive Strength (nominal)	f_c'	lbf/in.^{2}	10,000	10,000	10,000	10,000	10,000
Steel Modulus of Elasticity	E_s	lbf/in.^{2}	29000000	29000000	29000000	29000000	29000000

3. Reinforced Concrete Design

The reinforced concrete component is manufactured with 10,000 psi (nominal) pre-cast concrete and four (4) 60,000 psi vertical reinforcing bars. Number 4 bars are used for the PC6300, PC6400, and PC6600, while number 5 bars are used for the PC8300, and PC8400 models. The required concrete cover for reinforcing bars in pre-cast concrete is lower because of better placement accuracy during the manufacturing process. The high concrete strength and quality is achieved by adding superplasticizers which increase strength by allowing a low water-to-cement ratio. Fiber reinforcers are added to reduce shrinkage, increase impact resistance, and increase flexural strength. Other admixtures are included in the concrete mix to increase freeze/thaw resistance, protect the steel reinforcement from rusting, increase flexural and compressive strength, and optimize the hydration process. Bending, axial and shear strength properties of the reinforced concrete are discussed in Section 3 of the Manual.

4. Steel Bracket Design

Figure 4.1 shows dimensions for the different steel brackets that are used with the ***Perma-Column*** assemblies. The brackets consist of ¼" A36 steel with 5/8" diameter holes for the bolts, and 5/16" diameter holes for screws. The bracket connection utilizes ½" diameter A325 bolts in double shear with hex nuts torqued to 110 ft-lbs, and ¼"x3" strong drive screws (SDS) by Simpson Strong-Tie or equivalent in single shear installed from each side. Typically, one screw is installed from each side of the bracket at each bolt, except the PC8300 and the PC8400 have two screws on each side at each bolt. Screws help prevent stress concentrations around the bolt which would cause splitting of the wood members. The wood columns bear directly on a ¼" steel seat plate which helps to transfer axial loads directly into the concrete base. Four A706 weldable reinforcing bars are inserted in holes in the bottom of the bracket and fillet welded, connecting the bracket to the concrete base.

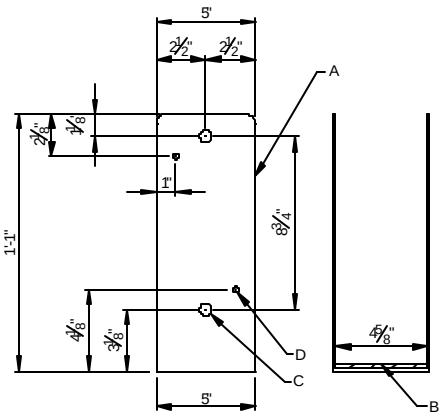

Parts Notes:
A = 1/4" steel bracket
B = 1/4" steel seat plate
C = 5/8"Ø hole for bolt
D = 5/16"Ø hole for screw

PC6300

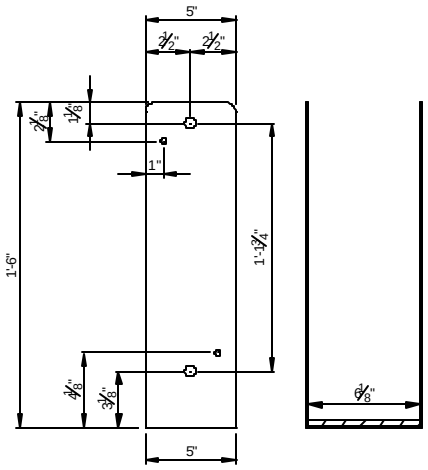

PC6400

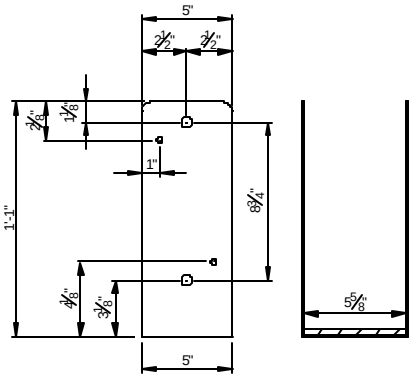

PC6600

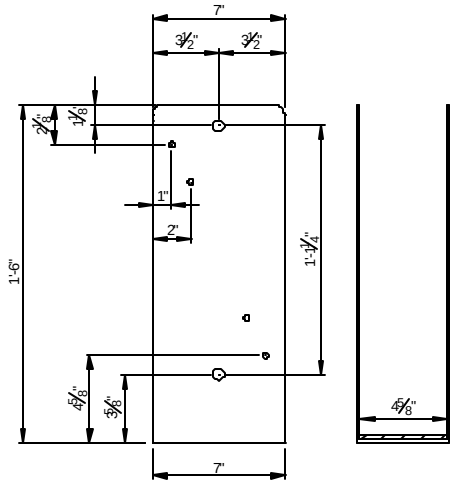

PC8300

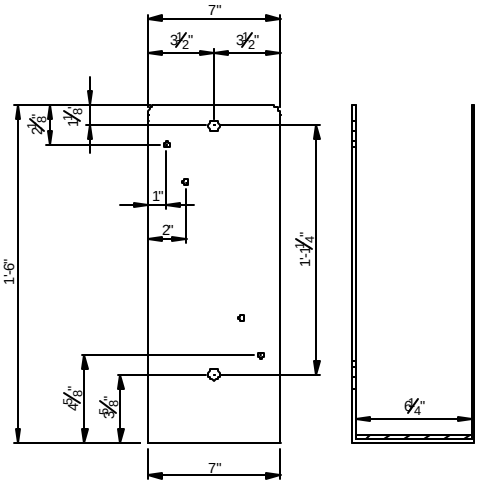

PC8400

Figure 4.1 Steel Bracket Assemblies

4.1 Bracket Moment Capacity

This joint has significant moment capacity and does not need to be modeled as a pin. The strength of the concrete-to-steel bracket, and the steel bracket-to-wood post connections needs to be evaluated in order to determine the moment capacity of the joint. The reinforcing bars transfer shear and moment between the concrete base and the steel bracket. The failure modes observed in the laboratory testing are 1.) concrete crushing and 2.) tension steel fracture (see Figure B.5 and B.6 in the Manual). The bolts and screws transfer shear and moment between the steel bracket and wood column. The fasteners themselves, and not the steel bracket, control the strength of this joint. The bolt and screw design should be performed according to the 1996 edition of the *LFRD Manual for Engineered Wood Construction* by The American Forest and Paper Association (AF&PA).

4.2 Rotational Stiffness

The rotational stiffness of the steel bracket connection depends upon both concrete-to-steel, and steel-to-wood movement. Table B.2 and Figure B.4 in the Manual show joint rotation versus bending moment data for the steel bracket-to-concrete connection. The moment capacity of each steel bracket was chosen as 60% of the maximum tabulated value shown in Table B.2 of the Manual. Table 4.1 shows the calculated stiffness values for the concrete-to-steel joint as discussed in Section 6.2 of the Manual. A linear assumption between joint rotation and bending moment was used to determine the rotational stiffness of each bracket. This stiffness value is needed in order to create a model as discussed in Section 6 of this Guide.

The stiffness of the steel-to-wood connection is controlled by the slip modulus for the bolts and screws, and is discussed in Section 6 of the Manual. The slip modulus should be assigned to the fastener group by summing the values of the individual fasteners in the group. The slip modulus for the ½" bolt in double shear is 85.5 k/in, and for the screws is 28.7 kips per inch.

Table 4.1 Element Strength and Stiffness Values

Series	Concrete-to-Steel Stiffness (k-in/rad)	Ultimate Strength (in-kip)
PC6300	2500	70.4
PC6400	2523	70.9
PC6600	2503	70.4
PC8300	4815	123.9
PC8400	4874	138.9

4.3 Friction

The moment capacity and rotational stiffness of the steel-to-wood joint is enhanced by friction produced when the bracket tends to pinch together as the bending moment increases. No increases were taken in the Manual for this phenomenon, but it remains as an additional safety factor against steel bracket-to-wood connection failure.

5. Mechanically Laminated Wood Column Design

The wood portion of a ***Perma-Column*** assembly is designed using LRFD because that is the preferred method of design for the steel and reinforced concrete components. Reference strengths for wood member sizing, and the factored resistance values for connection detailing are taken from the 1996 edition of the *LFRD Manual for Engineered Wood Construction* by AF&PA. Design procedures were

taken from ASAE EP559 *Design Requirements and Bending Properties for Mechanically Laminated Columns* and from *The LFRD Manual.* **No wet service reductions have been used since the wood portion is not in contact with the soil or concrete**, and it is assumed to be used in an enclosed building. There are no splices in the wood laminations. Axial load is assumed to be transferred by direct bearing on the seat plate, and not through bolts or screws. Buckling length for bending about the strong axis is one foot less than the overall column height because the concrete portion extends one foot above grade. The corresponding effective buckling length factor, Ke, was conservatively taken as 1.2 for columns fixed at the base, with horizontal movement allowed at the top; and 0.8 for columns pinned at the top. Structural analyses were performed using #1 Southern Yellow Pine (SYP), and #2 Spruce Pine Fir (SPF). The #1 SYP Nail-Lam "Plus" column as manufactured by Ohio Timberland Products, Inc was also included. More wood species and column assemblies will be checked in the future.

6. Modeling

Figure 6.1 shows an example of the structural analogs that were used to check each ***Perma-Column*** assembly. The structural analysis was performed using *Frame Analysis and Design* by Digital Canal, Inc. The structural analog was created with element stiffness values that closely simulate laboratory test results. These structural analogs can be used to predict ***Perma-Column*** assembly behavior under many different load conditions. The concrete element for each ***Perma-Column*** model was created using a concrete modulus of elasticity E_c, of 5.7 million psi, and an effective moment of inertia, I_e, as given in Table 5.2.1 in the Manual. I_e for the PC6600 was taken as 30 in^4 for modeling purposes. Elements 1, 2, and 3 of the analogs shown in Figure 6.1 represent the reinforced concrete base.

Element 4 in the analog represents the steel bracket. The purpose of this element is to model the bending flexibility of the steel bracket where it attached to the concrete. This element was assigned a modulus of elasticity, Es of 29 million psi, an effective length Le of 2.5 inches, and an effective moment of inertia I equal to S(Le)/Es where S is the rotational stiffness from Table 4.1. Table 6.1 summarizes the moment of inertia used for the concrete and steel bracket elements.

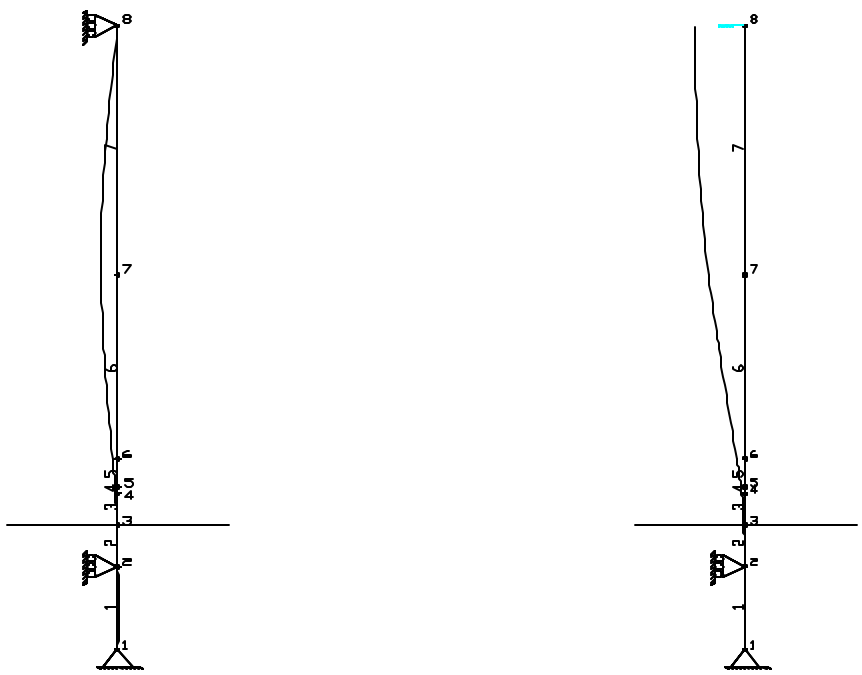

8300-16-0 Analog 8300-16-120 Analog

Figure 6.1 Structural analogs for a column with pin or spring at top

Table 6.1 Element Moment of Inertia Values (in^4)			
Series	Concrete Element (Ie)	Concrete-to-Steel Element (I)	Steel-to-Wood Element (I)
PC6300	25.4	0.215	1.26
PC6400	38.7	0.218	5.41
PC6600	30	0.216	1.26
PC8300	72.2	0.415	4.6
PC8400	88.3	0.420	4.6

Element 5 in the analog is used to model the bracket-to-wood connection. This element extends between the fastener groups, and models the rotation between steel and wood. The length varies depending on the centroid of the fastener group. 8 inches was used for the PC6300 and PC6600, 13 inches for PC6400, and 11 inches for PC8300 and PC8400 (see Figure 4.1).

Elements 6 and 7 in the analog represent the laminated wood column with an E value of 1.7 million psi for # 1 SYP, and 1.4 million psi for #2 SPF.

After the structural analog was created and the loading applied, a P-delta analysis was performed to account for increased section forces induced by column deflection. Three post models were analyzed for each height to simulate different boundary conditions at the eave. The first assumes a very rigid diaphragm which allows no horizontal movement at the eave. The second and third models allow a horizontal movement corresponding to L/240 and L/120 respectively. These eave displacements were evaluated using service loads, and the larger of sidesway or curvature was taken as the controlling value. Horizontal movement was created in the model by using a spring support in place of a roller support. The post foundation was modeled assuming a 4'-0" embedment depth. A pin was used at the bottom, and a vertical roller at 1/3 the embedment depth to simulate a non-constrained post foundation.

7. Perma-Column Design Charts

Table 7.1 shows the maximum factored vertical load, P_u, for ***Perma-Column*** assemblies under a constant wind load of 120 pounds per lineal foot. The post heights evaluated range from 8'-0" up to 20'-0" in two foot increments. Blank boxes in the chart indicate the column fails in deflection due to the constant wind load. Gray shaded numbers indicate ***Perma-Column*** assemblies limited by the steel bracket capacity. The failure modes checked are as follows:

1. Deflection Due to Service Loads
2. Wood Elements
    a. Combined axial and bending moment
    b. Shear
3. Steel Bracket Element
    a. Bending moment at base
4. Bracket-to-Wood Connection Element
    a. Combined shear and bending moment on steel-to-wood connection
5. Concrete Elements
    a. Bending moment and axial force compared to Interaction Diagram in Figure 3.3.2 in the Manual
    b. Shear

Table 7.1 Perma-Column Design Chart

Maximum factored vertical load, Pu (kips), for Perma-Column assemblies under constant wind load

		Column Height (ft)																				
#1 SYP		**8**			**10**			**12**			**14**			**16**			**18**			**20**		
	Eave Condition	**I**	**II**	**III**	**I**	**II**	**III**	**I**	**II**	**III**	**I**	**II**	**III**	**I**	**II**	**III**	**I**	**II**	**III**	**I**	**II**	**III**
	Eave Deflection (in)	**0**	**0.8**	**0.4**	**0**	**1**	**0.5**	**0**	**1.2**	**0.6**	**0**	**1.4**	**0.7**	**0**	**1.6**	**0.8**	**0**	**1.8**	**0.9**	**0**	**2**	**1**
PC6600	**6x6**	38	33	33	32	24.6		24	16.2		17											
PC6300	**3 ply x 6**	56	33.6	33.6	42	23.4	23.4	29	16.8	16.8	19	10.8		13	5.4							
PC6400	**4 ply x 6**	75	45	45	58	31.8	31.8	42	22.8	22.8	29	16.8		20	12		15					
PC8300	**3 ply x 8**	80	63	63	70	48	48	60	36	36	41	27.6	27.6	34	21.6	21.6	26	15	15	19		
PC8400	**4 ply x 8**	100	63	63	90	63	63	80	48	48	64	36	36	49	29.4	29.4	38	23.4	23.4	29	9	
Ohio Timberland Nail-Lam "Plus"																						
PC6300	**3 ply x 6**	57	35	35	41.5	20.5	20.5	27.5	12.8	12.8	20.3	9.3		12	5.4							
PC6400	**4 ply x 6**	78.8	49	49	58.6	29	29	40	18.6	18.6	27.2	12.4		18.7	8.4		13.8					
PC8300	**3 ply x 8**	84	72.6	72.6	79	54.5	54.5	63.9	34.6	36.6	43.3	23.6	23.6	35.4	16.4	16.4	27.2	12.4	12.4	20		
PC8400	**4 ply x 8**	114	98.6	98.6	104	71	71	89	48.7	48.7	69.2	33.8	33.8	51.5	24	24	39.6	18	18	30.4	9	

Comparison to typical pressure treated wood columns																						
	Column Height (ft)																					
	8			**10**			**12**			**14**			**16**			**18**			**20**		
Eave Condition	**I**	**II**	**III**	**I**	**II**	**III**	**I**	**II**	**III**	**I**	**II**	**III**	**I**	**II**	**III**	**I**	**II**	**III**	**I**	**II**	**III**
Eave Deflection (in)	**0**	**0.8**	**0.4**	**0**	**1**	**0.5**	**0**	**1.2**	**0.6**	**0**	**1.4**	**0.7**	**0**	**1.6**	**0.8**	**0**	**1.8**	**0.9**	**0**	**2**	**1**
6x6 #2 trd SYP	21	21	21	16	10.8	10.8	11														
3 ply x 6 trd. #1 SYP*	41	30	30	38	20.4	20.4	19	12	12	13	5.7		8								
* Non-spliced																					

		Column Height (ft)																				
#2 SPF		**8**			**10**			**12**			**14**			**16**			**18**			**20**		
	Eave Condition	**I**	**II**	**III**	**I**	**II**	**III**	**I**	**II**	**III**	**I**	**II**	**III**	**I**	**II**	**III**	**I**	**II**	**III**	**I**	**II**	**III**
	Eave Deflection (in)	**0**	**0.8**	**0.4**	**0**	**1**	**0.5**	**0**	**1.2**	**0.6**	**0**	**1.4**	**0.7**	**0**	**1.6**	**0.8**	**0**	**1.8**	**0.9**	**0**	**2**	**1**
PC6300	**3 ply x 6**	48	26.4	26.4	27	17.4	17.4	18	8.4	8.4	11	1.5										
PC6400	**4 ply x 6**	49	33	33	38	24.6	24.6	27	16.8	16.8	18	7.8		11	1.8							

Chart Assumptions:

- All members and connections designed using Load and Resistance Factor Design (LRFD) with P-delta analysis to account for forces induced by deflection
- Constant wind load of 120 pounds per lineal foot on each post based on 90 mph wind speed
- All posts pin supported at top to simulate resistance from diaphragm action
- Eave Condition I allows no horizontal movement at eave, Condition II allows L/120, and Condition III allows L/240 horizontal movement.
- Maximum deflection limit under service loads of L/120, actual deflections based on larger of sidesway or curvature
- Effective length factor, Ke, is 0.8 for Condition I, and 1.2 for Conditions II and III
- Non-constrained post foundation with 4'-0" embedment depth
- Full lateral bracing and major axis bending only; no loads acting on weak axis
- Dry use for laminated wood portion in Perma column assembly
- No splices in laminated wood portion
- Exterior sidewall post with lateral loading from wind only
- Laminated wood portion transfers axial loads through direct bearing on steel seat plate
- Blank in chart represents deflection controls design, gray box indicates wood connection at steel bracket controls
- Final column design should include a complete building analysis by a Design Professional

The notes at the bottom of the chart describe the assumptions and conditions to which these maximum vertical loads apply. This chart assumes columns with full lateral bracing and only major axis bending. It is also important to note that the structural analogs used to create these charts have a support at the top of the post to simulate resistance to horizontal loads due to diaphragm action. The ***Perma-Column*** assemblies are not designed for "flagpole" situations where no support at the top of the posts can be expected. Additional wind bracing or kneebraces may need to be added to the overall building design if no diaphragm resistance is present. This is especially important to keep in mind when using the PC6600 as a replacement post. The overall building design should be evaluated to verify that the replacement post is adequate.

The chart shows that the main controlling factors in the design are the imposed deflection limits, and the strength of the wood portion of the column. The bracket connection to the wood post controls the design for the 20' high, condition 2 only**. A comparison to a 6x6 #2 treated column, and a 3 ply 2x6 #1 treated non-spliced column using the same wind load and same boundary conditions is shown. The PC6300 performs significantly better than its 3 ply 2x6 treated counterpart mainly because it has no wet service reduction, and the maximum bending moment is resisted by the concrete component below grade.** Updating this chart with an effective buckling length factor, Ke, of 1.0 for conditions II and III may better represent the actual behavior of the columns in the field, and would give better performance overall.

8. Design Example

This design example is for a PC8300 with a 3 ply 2x6 #1 Southern Pine laminated wood column. The column is 16' high and the eave is allowed to deflect horizontally 1.6" (L/120). The vertical load is 2.8 kips dead load, and 8.4 kips snow load. The horizontal loading is 120 pounds per foot due to wind load. All assumptions listed in the chart apply to this example, as does the structural analog with a spring shown in Figure 6.1. This is a summary of the design process; the detailed calculations are available in the Appendices to this document.

8.1 The controlling load combinations for the given dead, snow, and wind loading are as follows

1) D + W (Service loads for deflection check)
2) 1.2D + 1.6S + 0.8W
3) 1.2D + 0.5S + 1.6W
4) 0.9D + 1.6W

8.2 The column is analyzed for the given loading and the failure modes checked as outlined in Section 7 above.

8.2.1 Deflection due to service loads
Actual deflections are within allowable of 16(12)/120 = 1.6 OK

8.2.2 The factored internal forces in the wood elements are M_{ux} = 25 inch-kips and Pu = 16.8 kips for load combination 2, and M_{ux} = 60 inch-kips and Pu = 6.5 kips for load combination 3.

8.2.2.1 The interaction value in the combined axial force and bending moment check is .96 for load combination 2, and 0.49 for load combination 3. 0.91 < 1.0 OK

8.2.2.2 The design shear strength of a 3 ply 2x8 SYP member is 8.5 kips. The factored shear is 1.5 kips. OK

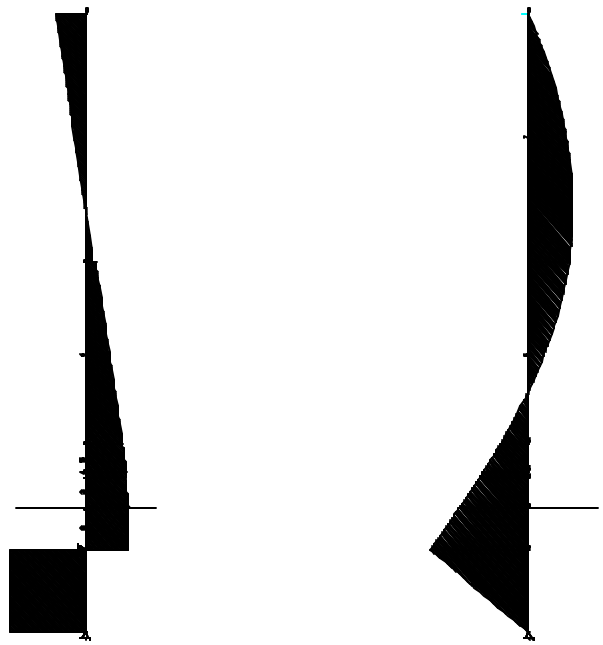

Shear Diagram (Comb 3) | Moment Diagram (Comb 3)

Figure 8.1 Shear and Moment diagram for PC8300, 16' high with 1.6" maximum deflection under load combination 3

8.2.3 Steel Bracket Element

8.2.3.1 The maximum factored bending moment at the bottom of the steel bracket is 37.7 inch-kips compared to the chosen allowable moment of 74.34 inch-kips from Table B.2 in the Manual OK

8.2.4 Bracket-to-Wood Connection Element

8.2.4.1 The combined shear and bending moment on the connection produce an equal and opposite force on the top and bottom fastener groups. The factored shear is 1.5 kips, and the average factored moment is 28.85 inch-kips. These combine to produce a resultant load of 4.2 kips on each fastener group assuming a distance of 11 inches between the centroid of each group. The maximum allowed connection force due to factored loads is 4.7 kips. OK

8.2.5 Concrete Elements

8.2.5.1 The maximum factored bending moment below grade under load combination 3 is 92 inch-kips along with a factored axial force of 10 kips. These are well within the allowable envelope for the PC8300 when compared to the Interaction Diagram in Figure 3.3.2 in the Manual. OK

8.2.5.2 The minimum design shear strength of the PC8300 as given in Table 3.4.1 of the Manual is 4.5 kips. The factored shear in this example problem is 3.1 kips. OK

This column is adequate for the design loading.

9. Wind Uplift Capacity

Figure 9.1 shows two foundation conditions that may be used with a ***Perma-Column***. The wind uplift capacity can be evaluated for each foundation condition using the procedure described in *ANSI/ASAE EP486.1 October 2000 Shallow Post Foundation Design*. The uplift calculations in this section follow the allowable stress design equations of *EP486.1*, and therefore are unfactored capacities. They should be compared with unfactored net uplift values to determine adequacy for a particular situation. Upward movement of a ***Perma-Column*** post foundation cannot occur without displacing a cone of soil as defined below.

For circular footings and collars:
Circular cast-in place concrete collars displace a conically shaped wedge of soil. The potential resistance of a circular collar, including soil and attached concrete, can be calculated from the following equation:

$$U = aG[0.33p\{[(d-t)+0.5w/\tan q]^3(\tan q)^2 - 0.125w^3/\tan q\} - A_p(d-t)] + 0.25Cpw^2tG$$ *Source: ANSI/ASAE EP486.1 OCT00: Shallow Post Foundation Design*

where:
U = soil and foundation uplift resistance, kN (lbf)
α = soil density, kg/m^3 (85 lb/ft^3)
C = presumed concrete density, 90 kg/m^3 (150 lb/ft^3)
G = gravitational constant, 1 lbf/lbm (9.81N/kg)
d = embedment depth, m (4 ft)
t = collar thickness, m (1 ft)
w = collar width, m (ft)

For rectangular footings and collars:

Angle plates are fastened to the post displacing a round corner, truncated prismatic wedge of soil radiating above the angle plates. The uplift resistance from the mass of the truncated prismatic volume is calculated by the following equation:

$$U = aG[(wl - A_p)(d-t) + (w+l)(d-t)^2 \tan q + 0.33p(d-t)^2 \tan^2 q]$$
Source: ANSI/ASAE EP486.1 OCT00: Shallow Post Foundation Design

where:
U = soil uplift resistance, kN (lbf)
α = soil density, kg/m^3 (lb/ft^3)
G = gravitational constant, 1 lbf/lbm (9.81N/kg)
d = embedment depth, m (ft)
t = steel collar thickness, m (ft)
w = width of collar, m (ft)
l = length of collar, m (ft)
A_p = post cross sectional area, m^2 (ft^2)
θ = soil friction angle, 26 deg

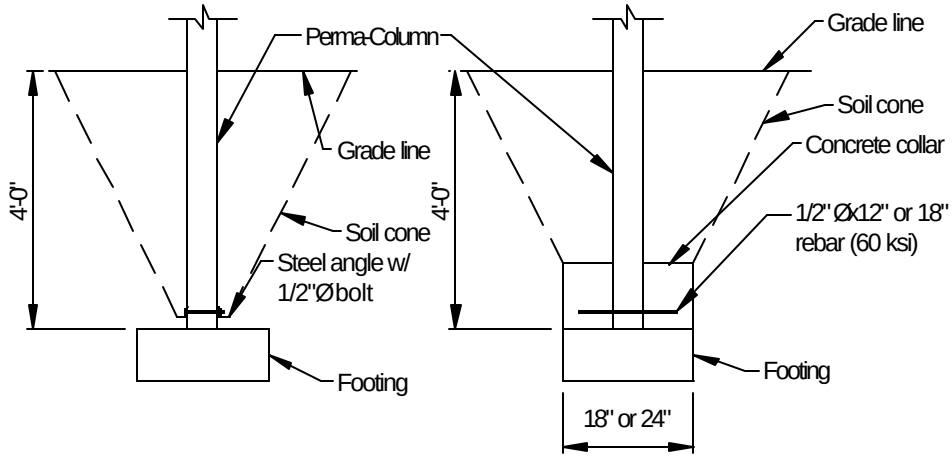

Standard Design Alternative Design

Figure 9.1 Foundation Details

Table 9.1 shows the wind uplift capacity in pounds for these foundation conditions:

1. 18" diameter concrete collar with ½"x12" reinforcing bar through ***Perma-Column***
2. 24" diameter concrete collar with ½"x18" reinforcing through ***Perma-Column***
3. 2x2x8 ½ x 0.134" galvanized steel anchor with packed fill around posts
4. 2x2x12 x 0.134" galvanized steel anchor with packed fill around posts

Table 9.1 Allowable Unfactored Uplift*

PermaColumn	**Concrete Collar**		**Uplift Angle**	
	18"	**24"**	**2x2x8 ½**	**2x2x12**
PC6300	2272	3253	1908	2693
PC6400	2257	3238	2004	2789
PC6600	2262	3243	1972	2757
PC8300	2255	3236	2005	2790
PC8400	2236	3217	2102	2887

* Units are in pounds (lb)

The values in the chart are all limited by the weight of the soil cone. The shear strength of a 1/2" Grade 2 bolt (ASTM A307 bolt) is 10.0 ksi as published by the *AISC Ninth Edition ASD Construction Manual Table J3.2*. A ½" bolt has a cross sectional area of 0.196 in^2, thus a Grade 2 bolt in double shear will resist 3.92 kips (3920 pounds). The uplift angles are analyzed as a cantilever with a unit load at the midspan. The maximum uplift is calculated by the equation: $P_{allow} = (S_x F_b)/(L/2)$ (Fig 9.2 below).

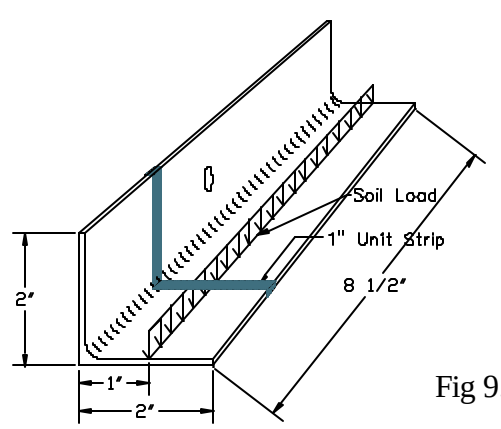

Fig 9.2

10. Summary and Conclusion

Perma-Column assemblies consist of wood, steel, and reinforced concrete elements, and should be designed using LRFD. The PC6600 is not included in the Manual, but can be expected to perform between the PC6300 and the PC6400 models. New technologies with Self Compacting Concrete (SCC) make it possible to manufacture a high quality product through the use of superplasticizers and a low water to cement ratio. The 10,000 psi (nominal) compressive strength protects the reinforcing bars by limiting chips and cracks during handling, and also by reducing the effect of freeze-thaw cycles. Steel bracket can be designed as a moment connection if the structural analog accurately models the rotational stiffness from the laboratory testing for the concrete-to-steel and steel-to-wood connections. The wood portion of the ***Perma-Column*** assemblies can be any grade or species of lumber; however, this Guide only deals with #1 SYP, the #1 SYP Nail-Lam "Plus" column as manufactured by Ohio Timberland Products, Inc, and #2 SPF. The effective length factor, Ke, for buckling was conservatively taken as 1.2 for columns fixed at the base, with horizontal movement allowed at the top (conditions II and III); and 0.8 for columns pinned at the top (condition I). Using an effective buckling length factor, Ke, of 1.0 for conditions II and III may better represent the actual behavior of the columns in the field, and would give better performance overall.

Each ***Perma-Column*** component can be modeled using a structural analog with properties corresponding to the results of the laboratory testing, and can be used to simulate the ***Perma-Column*** behavior under many other load conditions. The design charts in this Guide show that the ***Perma-Column*** assemblies are limited primarily by overall deflection, and by strength of the laminated wood members. The steel bracket connection to the wood component may be a limiting factor for tall columns under high wind loads. **The Perma-Column assemblies perform significantly better than typical mechanically laminated wood columns under the same boundary conditions mainly because they have no wet service reduction, and the maximum bending moment is resisted by the concrete component below grade. The steel bracket and the reinforced concrete base did not control under the design conditions presented in this Guide.** There are several foundation detail options including concrete collars and steel uplift angles that can be used with a ***Perma-Column*** to achieve adequate uplift resistance for most applications.

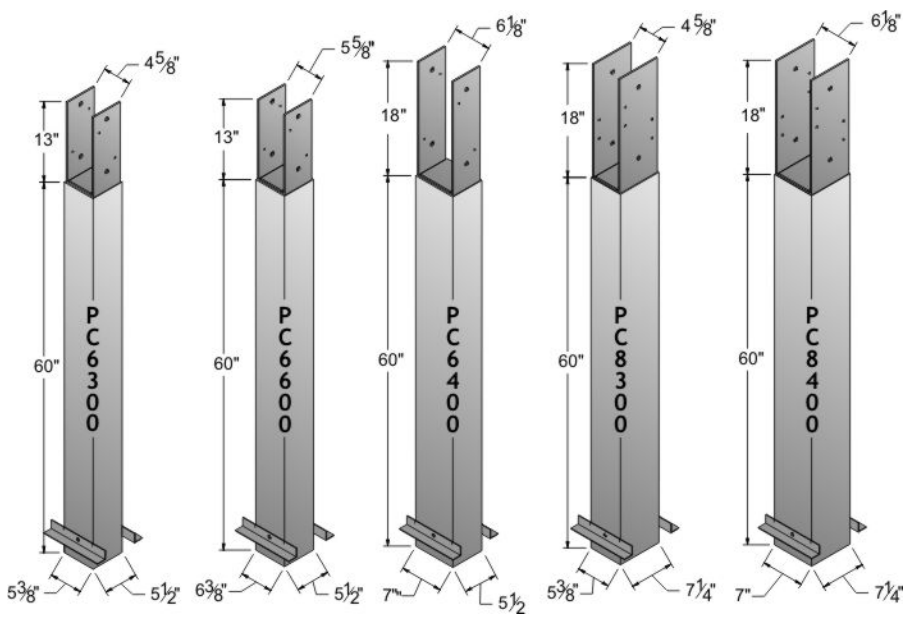

PERMA-COLUMN POST SIZING CHART

2/20/2007

To be used for Estimating purposes only and Engineer of record is required

Condition 1 / DL increase of 1.2 / LL increase of 1.6 / Building Length not to exceed 2 1/2 times the width / 4'-0" Post Depth is assumed

POST SPACE FT.	BLDG WIDTH FT.	TTL RF DL	TTL RF LL		TOTAL ROOF LOAD 30	8' UNDER TRUSS	10' UNDER TRUSS	12' UNDER TRUSS	14' UNDER TRUSS	16' UNDER TRUSS	18' UNDER TRUSS	20' UNDER TRUSS
8	24	10	20	=	4.22 KIPS	4" X 6" SYP POST	4" X 6" SYP POST	6" X 6" SYP POST	6" X 6" SYP POST	3 PLY X 6 # 1 SYP	4 PLY X 6 # 1 SYP	3 PLY X 8 # 1 SYP
8	26	10	20	=	4.58 KIPS	4" X 6" SYP POST	4" X 6" SYP POST	6" X 6" SYP POST	6" X 6" SYP POST	3 PLY X 6 # 1 SYP	4 PLY X 6 # 1 SYP	3 PLY X 8 # 1 SYP
8	28	10	20	=	4.93 KIPS	4" X 6" SYP POST	4" X 6" SYP POST	6" X 6" SYP POST	6" X 6" SYP POST	3 PLY X 6 # 1 SYP	4 PLY X 6 # 1 SYP	3 PLY X 8 # 1 SYP
8	30	10	20	=	5.28 KIPS	4" X 6" SYP POST	4" X 6" SYP POST	6" X 6" SYP POST	6" X 6" SYP POST	3 PLY X 6 # 1 SYP	4 PLY X 6 # 1 SYP	3 PLY X 8 # 1 SYP
8	32	10	20	=	5.63 KIPS	4" X 6" SYP POST	4" X 6" SYP POST	6" X 6" SYP POST	6" X 6" SYP POST	3 PLY X 6 # 1 SYP	4 PLY X 6 # 1 SYP	3 PLY X 8 # 1 SYP
8	34	10	20	=	5.98 KIPS	4" X 6" SYP POST	4" X 6" SYP POST	6" X 6" SYP POST	6" X 6" SYP POST	3 PLY X 6 # 1 SYP	4 PLY X 6 # 1 SYP	3 PLY X 8 # 1 SYP
8	36	10	20	=	6.34 KIPS	4" X 6" SYP POST	4" X 6" SYP POST	6" X 6" SYP POST	6" X 6" SYP POST	3 PLY X 6 # 1 SYP	4 PLY X 6 # 1 SYP	3 PLY X 8 # 1 SYP
8	38	10	20	=	6.69 KIPS	4" X 6" SYP POST	4" X 6" SYP POST	6" X 6" SYP POST	6" X 6" SYP POST	3 PLY X 6 # 1 SYP	4 PLY X 6 # 1 SYP	3 PLY X 8 # 1 SYP
8	40	10	20	=	7.04 KIPS	4" X 6" SYP POST	4" X 6" SYP POST	6" X 6" SYP POST	6" X 6" SYP POST	3 PLY X 6 # 1 SYP	4 PLY X 6 # 1 SYP	3 PLY X 8 # 1 SYP
8	42	10	20	=	7.39 KIPS	4" X 6" SYP POST	4" X 6" SYP POST	6" X 6" SYP POST	6" X 6" SYP POST	3 PLY X 6 # 1 SYP	4 PLY X 6 # 1 SYP	3 PLY X 8 # 1 SYP
8	44	10	20	=	7.74 KIPS	4" X 6" SYP POST	4" X 6" SYP POST	6" X 6" SYP POST	6" X 6" SYP POST	3 PLY X 6 # 1 SYP	4 PLY X 6 # 1 SYP	3 PLY X 8 # 1 SYP
8	46	10	20	=	8.10 KIPS	4" X 6" SYP POST	4" X 6" SYP POST	6" X 6" SYP POST	6" X 6" SYP POST	3 PLY X 6 # 1 SYP	4 PLY X 6 # 1 SYP	3 PLY X 8 # 1 SYP
8	48	10	20	=	8.45 KIPS	4" X 6" SYP POST	4" X 6" SYP POST	6" X 6" SYP POST	6" X 6" SYP POST	3 PLY X 6 # 1 SYP	4 PLY X 6 # 1 SYP	3 PLY X 8 # 1 SYP
8	50	10	20	=	8.80 KIPS	4" X 6" SYP POST	4" X 6" SYP POST	6" X 6" SYP POST	6" X 6" SYP POST	3 PLY X 6 # 1 SYP	4 PLY X 6 # 1 SYP	3 PLY X 8 # 1 SYP
8	52	10	20	=	9.15 KIPS	4" X 6" SYP POST	4" X 6" SYP POST	6" X 6" SYP POST	6" X 6" SYP POST	3 PLY X 6 # 1 SYP	4 PLY X 6 # 1 SYP	3 PLY X 8 # 1 SYP
8	54	10	20	=	9.50 KIPS	4" X 6" SYP POST	4" X 6" SYP POST	6" X 6" SYP POST	6" X 6" SYP POST	3 PLY X 6 # 1 SYP	4 PLY X 6 # 1 SYP	3 PLY X 8 # 1 SYP
8	56	10	20	=	9.86 KIPS	4" X 6" SYP POST	4" X 6" SYP POST	6" X 6" SYP POST	6" X 6" SYP POST	3 PLY X 6 # 1 SYP	4 PLY X 6 # 1 SYP	3 PLY X 8 # 1 SYP
8	58	10	20	=	10.21 KIPS	4" X 6" SYP POST	4" X 6" SYP POST	6" X 6" SYP POST	6" X 6" SYP POST	3 PLY X 6 # 1 SYP	4 PLY X 6 # 1 SYP	3 PLY X 8 # 1 SYP
8	60	10	20	=	10.56 KIPS	4" X 6" SYP POST	6" X 6" SYP POST	6" X 6" SYP POST	6" X 6" SYP POST	3 PLY X 6 # 1 SYP	4 PLY X 6 # 1 SYP	3 PLY X 8 # 1 SYP
8	62	10	20	=	10.91 KIPS	4" X 6" SYP POST	6" X 6" SYP POST	6" X 6" SYP POST	6" X 6" SYP POST	3 PLY X 6 # 1 SYP	4 PLY X 6 # 1 SYP	3 PLY X 8 # 1 SYP
8	64	10	20	=	11.26 KIPS	4" X 6" SYP POST	6" X 6" SYP POST	6" X 6" SYP POST	6" X 6" SYP POST	3 PLY X 6 # 1 SYP	4 PLY X 6 # 1 SYP	3 PLY X 8 # 1 SYP
8	66	10	20	=	11.62 KIPS	4" X 6" SYP POST	6" X 6" SYP POST	6" X 6" SYP POST	6" X 6" SYP POST	3 PLY X 6 # 1 SYP	4 PLY X 6 # 1 SYP	3 PLY X 8 # 1 SYP
8	68	10	20	=	11.97 KIPS	4" X 6" SYP POST	6" X 6" SYP POST	6" X 6" SYP POST	6" X 6" SYP POST	3 PLY X 6 # 1 SYP	4 PLY X 6 # 1 SYP	3 PLY X 8 # 1 SYP
8	70	10	20	=	12.32 KIPS	4" X 6" SYP POST	6" X 6" SYP POST	6" X 6" SYP POST	6" X 6" SYP POST	3 PLY X 6 # 1 SYP	4 PLY X 6 # 1 SYP	3 PLY X 8 # 1 SYP
8	72	10	20	=	12.67 KIPS	4" X 6" SYP POST	6" X 6" SYP POST	6" X 6" SYP POST	6" X 6" SYP POST	3 PLY X 6 # 1 SYP	4 PLY X 6 # 1 SYP	3 PLY X 8 # 1 SYP
8	74	10	20	=	13.02 KIPS	4" X 6" SYP POST	6" X 6" SYP POST	6" X 6" SYP POST	6" X 6" SYP POST	4 PLY X 6 # 1 SYP	4 PLY X 6 # 1 SYP	3 PLY X 8 # 1 SYP
8	76	10	20	=	13.38 KIPS	4" X 6" SYP POST	6" X 6" SYP POST	6" X 6" SYP POST	6" X 6" SYP POST	4 PLY X 6 # 1 SYP	4 PLY X 6 # 1 SYP	3 PLY X 8 # 1 SYP
8	78	10	20	=	13.73 KIPS	4" X 6" SYP POST	6" X 6" SYP POST	6" X 6" SYP POST	6" X 6" SYP POST	4 PLY X 6 # 1 SYP	4 PLY X 6 # 1 SYP	3 PLY X 8 # 1 SYP
8	80	10	20	=	14.08 KIPS	4" X 6" SYP POST	6" X 6" SYP POST	6" X 6" SYP POST	6" X 6" SYP POST	4 PLY X 6 # 1 SYP	4 PLY X 6 # 1 SYP	3 PLY X 8 # 1 SYP
8	82	10	20	=	14.43 KIPS	4" X 6" SYP POST	6" X 6" SYP POST	6" X 6" SYP POST	6" X 6" SYP POST	4 PLY X 6 # 1 SYP	4 PLY X 6 # 1 SYP	3 PLY X 8 # 1 SYP
8	84	10	20	=	14.78 KIPS	4" X 6" SYP POST	6" X 6" SYP POST	6" X 6" SYP POST	6" X 6" SYP POST	4 PLY X 6 # 1 SYP	4 PLY X 6 # 1 SYP	3 PLY X 8 # 1 SYP
8	86	10	20	=	15.14 KIPS	4" X 6" SYP POST	6" X 6" SYP POST	6" X 6" SYP POST	6" X 6" SYP POST	4 PLY X 6 # 1 SYP	3 PLY X 8 # 1 SYP	3 PLY X 8 # 1 SYP
8	88	10	20	=	15.49 KIPS	4" X 6" SYP POST	6" X 6" SYP POST	6" X 6" SYP POST	6" X 6" SYP POST	4 PLY X 6 # 1 SYP	3 PLY X 8 # 1 SYP	3 PLY X 8 # 1 SYP
8	90	10	20	=	15.84 KIPS	4" X 6" SYP POST	6" X 6" SYP POST	6" X 6" SYP POST	6" X 6" SYP POST	4 PLY X 6 # 1 SYP	3 PLY X 8 # 1 SYP	3 PLY X 8 # 1 SYP
8	92	10	20	=	16.19 KIPS	4" X 6" SYP POST	6" X 6" SYP POST	6" X 6" SYP POST	6" X 6" SYP POST	4 PLY X 6 # 1 SYP	3 PLY X 8 # 1 SYP	3 PLY X 8 # 1 SYP
8	94	10	20	=	16.54 KIPS	4" X 6" SYP POST	6" X 6" SYP POST	6" X 6" SYP POST	6" X 6" SYP POST	4 PLY X 6 # 1 SYP	3 PLY X 8 # 1 SYP	3 PLY X 8 # 1 SYP
8	96	10	20	=	16.90 KIPS	4" X 6" SYP POST	6" X 6" SYP POST	6" X 6" SYP POST	6" X 6" SYP POST	4 PLY X 6 # 1 SYP	3 PLY X 8 # 1 SYP	3 PLY X 8 # 1 SYP
8	98	10	20	=	17.25 KIPS	4" X 6" SYP POST	6" X 6" SYP POST	6" X 6" SYP POST	3 PLY X 6 # 1 SYP	4 PLY X 6 # 1 SYP	3 PLY X 8 # 1 SYP	3 PLY X 8 # 1 SYP

Chart data is based on the Perma-Column Design and Use Guide table 7.1

NOTE: A 3 ply x 6" #1 SYP column can be used to replace a 4" x 6" or 6" x 6" post

PERMA-COLUMN POST SIZING CHART

2/20/2007

To be used for Estimating purposes only and Engineer of record is required

Condition 1 / DL increase of 1.2 / LL increase of 1.6 / Building Length not to exceed 2 1/2 times the width / 4'-0" Post Depth is assumed

POST SPACE FT.	BLDG WIDTH FT.	TTL RF DL	TTL RF LL		TOTAL ROOF LOAD 40	8' UNDER TRUSS	10' UNDER TRUSS	12' UNDER TRUSS	14' UNDER TRUSS	16' UNDER TRUSS	18' UNDER TRUSS	20' UNDER TRUSS
8	24	10	30	=	5.76 KIPS	4" X 6" SYP POST	4" X 6" SYP POST	6" X 6" SYP POST	6" X 6" SYP POST	3 PLY X 6 # 1 SYP	4 PLY X 6 # 1 SYP	3 PLY X 8 # 1 SYP
8	26	10	30	=	6.24 KIPS	4" X 6" SYP POST	4" X 6" SYP POST	6" X 6" SYP POST	6" X 6" SYP POST	3 PLY X 6 # 1 SYP	4 PLY X 6 # 1 SYP	3 PLY X 8 # 1 SYP
8	28	10	30	=	6.72 KIPS	4" X 6" SYP POST	4" X 6" SYP POST	6" X 6" SYP POST	6" X 6" SYP POST	3 PLY X 6 # 1 SYP	4 PLY X 6 # 1 SYP	3 PLY X 8 # 1 SYP
8	30	10	30	=	7.20 KIPS	4" X 6" SYP POST	4" X 6" SYP POST	6" X 6" SYP POST	6" X 6" SYP POST	3 PLY X 6 # 1 SYP	4 PLY X 6 # 1 SYP	3 PLY X 8 # 1 SYP
8	32	10	30	=	7.68 KIPS	4" X 6" SYP POST	4" X 6" SYP POST	6" X 6" SYP POST	6" X 6" SYP POST	3 PLY X 6 # 1 SYP	4 PLY X 6 # 1 SYP	3 PLY X 8 # 1 SYP
8	34	10	30	=	8.16 KIPS	4" X 6" SYP POST	4" X 6" SYP POST	6" X 6" SYP POST	6" X 6" SYP POST	3 PLY X 6 # 1 SYP	4 PLY X 6 # 1 SYP	3 PLY X 8 # 1 SYP
8	36	10	30	=	8.64 KIPS	4" X 6" SYP POST	4" X 6" SYP POST	6" X 6" SYP POST	6" X 6" SYP POST	3 PLY X 6 # 1 SYP	4 PLY X 6 # 1 SYP	3 PLY X 8 # 1 SYP
8	38	10	30	=	9.12 KIPS	4" X 6" SYP POST	4" X 6" SYP POST	6" X 6" SYP POST	6" X 6" SYP POST	3 PLY X 6 # 1 SYP	4 PLY X 6 # 1 SYP	3 PLY X 8 # 1 SYP
8	40	10	30	=	9.60 KIPS	4" X 6" SYP POST	4" X 6" SYP POST	6" X 6" SYP POST	6" X 6" SYP POST	3 PLY X 6 # 1 SYP	4 PLY X 6 # 1 SYP	3 PLY X 8 # 1 SYP
8	42	10	30	=	10.08 KIPS	4" X 6" SYP POST	4" X 6" SYP POST	6" X 6" SYP POST	6" X 6" SYP POST	3 PLY X 6 # 1 SYP	4 PLY X 6 # 1 SYP	3 PLY X 8 # 1 SYP
8	44	10	30	=	10.56 KIPS	4" X 6" SYP POST	6" X 6" SYP POST	6" X 6" SYP POST	6" X 6" SYP POST	3 PLY X 6 # 1 SYP	4 PLY X 6 # 1 SYP	3 PLY X 8 # 1 SYP
8	46	10	30	=	11.04 KIPS	4" X 6" SYP POST	6" X 6" SYP POST	6" X 6" SYP POST	6" X 6" SYP POST	3 PLY X 6 # 1 SYP	4 PLY X 6 # 1 SYP	3 PLY X 8 # 1 SYP
8	48	10	30	=	11.52 KIPS	4" X 6" SYP POST	6" X 6" SYP POST	6" X 6" SYP POST	6" X 6" SYP POST	3 PLY X 6 # 1 SYP	4 PLY X 6 # 1 SYP	3 PLY X 8 # 1 SYP
8	50	10	30	=	12.00 KIPS	4" X 6" SYP POST	6" X 6" SYP POST	6" X 6" SYP POST	6" X 6" SYP POST	3 PLY X 6 # 1 SYP	4 PLY X 6 # 1 SYP	3 PLY X 8 # 1 SYP
8	52	10	30	=	12.48 KIPS	4" X 6" SYP POST	6" X 6" SYP POST	6" X 6" SYP POST	6" X 6" SYP POST	3 PLY X 6 # 1 SYP	4 PLY X 6 # 1 SYP	3 PLY X 8 # 1 SYP
8	54	10	30	=	12.96 KIPS	4" X 6" SYP POST	6" X 6" SYP POST	6" X 6" SYP POST	6" X 6" SYP POST	3 PLY X 6 # 1 SYP	4 PLY X 6 # 1 SYP	3 PLY X 8 # 1 SYP
8	56	10	30	=	13.44 KIPS	4" X 6" SYP POST	6" X 6" SYP POST	6" X 6" SYP POST	6" X 6" SYP POST	4 PLY X 6 # 1 SYP	4 PLY X 6 # 1 SYP	3 PLY X 8 # 1 SYP
8	58	10	30	=	13.92 KIPS	4" X 6" SYP POST	6" X 6" SYP POST	6" X 6" SYP POST	6" X 6" SYP POST	4 PLY X 6 # 1 SYP	4 PLY X 6 # 1 SYP	3 PLY X 8 # 1 SYP
8	60	10	30	=	14.40 KIPS	4" X 6" SYP POST	6" X 6" SYP POST	6" X 6" SYP POST	6" X 6" SYP POST	4 PLY X 6 # 1 SYP	4 PLY X 6 # 1 SYP	3 PLY X 8 # 1 SYP
8	62	10	30	=	14.88 KIPS	4" X 6" SYP POST	6" X 6" SYP POST	6" X 6" SYP POST	6" X 6" SYP POST	4 PLY X 6 # 1 SYP	4 PLY X 6 # 1 SYP	3 PLY X 8 # 1 SYP
8	64	10	30	=	15.36 KIPS	4" X 6" SYP POST	6" X 6" SYP POST	6" X 6" SYP POST	6" X 6" SYP POST	4 PLY X 6 # 1 SYP	3 PLY X 8 # 1 SYP	3 PLY X 8 # 1 SYP
8	66	10	30	=	15.84 KIPS	4" X 6" SYP POST	6" X 6" SYP POST	6" X 6" SYP POST	6" X 6" SYP POST	4 PLY X 6 # 1 SYP	3 PLY X 8 # 1 SYP	3 PLY X 8 # 1 SYP
8	68	10	30	=	16.32 KIPS	4" X 6" SYP POST	6" X 6" SYP POST	6" X 6" SYP POST	6" X 6" SYP POST	4 PLY X 6 # 1 SYP	3 PLY X 8 # 1 SYP	3 PLY X 8 # 1 SYP
8	70	10	30	=	16.80 KIPS	4" X 6" SYP POST	6" X 6" SYP POST	6" X 6" SYP POST	6" X 6" SYP POST	4 PLY X 6 # 1 SYP	3 PLY X 8 # 1 SYP	3 PLY X 8 # 1 SYP
8	72	10	30	=	17.28 KIPS	4" X 6" SYP POST	6" X 6" SYP POST	6" X 6" SYP POST	3 PLY X 6 # 1 SYP	4 PLY X 6 # 1 SYP	3 PLY X 8 # 1 SYP	3 PLY X 8 # 1 SYP
8	74	10	30	=	17.76 KIPS	4" X 6" SYP POST	6" X 6" SYP POST	6" X 6" SYP POST	3 PLY X 6 # 1 SYP	4 PLY X 6 # 1 SYP	3 PLY X 8 # 1 SYP	3 PLY X 8 # 1 SYP
8	76	10	30	=	18.24 KIPS	4" X 6" SYP POST	6" X 6" SYP POST	6" X 6" SYP POST	3 PLY X 6 # 1 SYP	4 PLY X 6 # 1 SYP	3 PLY X 8 # 1 SYP	3 PLY X 8 # 1 SYP
8	78	10	30	=	18.72 KIPS	4" X 6" SYP POST	6" X 6" SYP POST	6" X 6" SYP POST	3 PLY X 6 # 1 SYP	4 PLY X 6 # 1 SYP	3 PLY X 8 # 1 SYP	3 PLY X 8 # 1 SYP
8	80	10	30	=	19.20 KIPS	4" X 6" SYP POST	6" X 6" SYP POST	6" X 6" SYP POST	4 PLY X 6 # 1 SYP	4 PLY X 6 # 1 SYP	3 PLY X 8 # 1 SYP	4 PLY X 8 # 1 SYP
8	82	10	30	=	19.68 KIPS	4" X 6" SYP POST	6" X 6" SYP POST	6" X 6" SYP POST	4 PLY X 6 # 1 SYP	4 PLY X 6 # 1 SYP	3 PLY X 8 # 1 SYP	4 PLY X 8 # 1 SYP
8	84	10	30	=	20.16 KIPS	4" X 6" SYP POST	6" X 6" SYP POST	6" X 6" SYP POST	4 PLY X 6 # 1 SYP	3 PLY X 8 # 1 SYP	3 PLY X 8 # 1 SYP	4 PLY X 8 # 1 SYP
8	86	10	30	=	20.64 KIPS	4" X 6" SYP POST	6" X 6" SYP POST	6" X 6" SYP POST	4 PLY X 6 # 1 SYP	3 PLY X 8 # 1 SYP	3 PLY X 8 # 1 SYP	4 PLY X 8 # 1 SYP
8	88	10	30	=	21.12 KIPS	4" X 6" SYP POST	6" X 6" SYP POST	6" X 6" SYP POST	4 PLY X 6 # 1 SYP	3 PLY X 8 # 1 SYP	3 PLY X 8 # 1 SYP	4 PLY X 8 # 1 SYP
8	90	10	30	=	21.60 KIPS	4" X 6" SYP POST	6" X 6" SYP POST	6" X 6" SYP POST	4 PLY X 6 # 1 SYP	3 PLY X 8 # 1 SYP	3 PLY X 8 # 1 SYP	4 PLY X 8 # 1 SYP
8	92	10	30	=	22.08 KIPS	6" X 6" SYP POST	6" X 6" SYP POST	6" X 6" SYP POST	4 PLY X 6 # 1 SYP	3 PLY X 8 # 1 SYP	3 PLY X 8 # 1 SYP	4 PLY X 8 # 1 SYP
8	94	10	30	=	22.56 KIPS	6" X 6" SYP POST	6" X 6" SYP POST	6" X 6" SYP POST	4 PLY X 6 # 1 SYP	3 PLY X 8 # 1 SYP	3 PLY X 8 # 1 SYP	4 PLY X 8 # 1 SYP
8	96	10	30	=	23.04 KIPS	6" X 6" SYP POST	6" X 6" SYP POST	6" X 6" SYP POST	4 PLY X 6 # 1 SYP	3 PLY X 8 # 1 SYP	3 PLY X 8 # 1 SYP	4 PLY X 8 # 1 SYP
8	98	10	30	=	23.52 KIPS	6" X 6" SYP POST	6" X 6" SYP POST	6" X 6" SYP POST	4 PLY X 6 # 1 SYP	3 PLY X 8 # 1 SYP	3 PLY X 8 # 1 SYP	4 PLY X 8 # 1 SYP

Chart data is based on the Perma-Column Design and Use Guide table 7.1

NOTE: A 3 ply x 6" #1 SYP column can be used to replace a 4" x 6" or 6" x 6" post

PERMA-COLUMN POST SIZING CHART

2/20/2007

To be used for Estimating purposes only and Engineer of record is required

Condition 1 / DL increase of 1.2 / LL increase of 1.6 / Building Length not to exceed 2 1/2 times the width / 4'-0" Post Depth is assumed

POST SPACE FT.	BLDG WIDTH FT.	TTL RF DL	TTL RF LL		TOTAL ROOF LOAD 50	8' UNDER TRUSS	10' UNDER TRUSS	12' UNDER TRUSS	14' UNDER TRUSS	16' UNDER TRUSS	18' UNDER TRUSS	20' UNDER TRUSS
8	24	10	40	=	7.30 KIPS	4" X 6" SYP POST	4" X 6" SYP POST	6" X 6" SYP POST	6" X 6" SYP POST	3 PLY X 6 # 1 SYP	4 PLY X 6 # 1 SYP	3 PLY X 8 # 1 SYP
8	26	10	40	=	7.90 KIPS	4" X 6" SYP POST	4" X 6" SYP POST	6" X 6" SYP POST	6" X 6" SYP POST	3 PLY X 6 # 1 SYP	4 PLY X 6 # 1 SYP	3 PLY X 8 # 1 SYP
8	28	10	40	=	8.51 KIPS	4" X 6" SYP POST	4" X 6" SYP POST	6" X 6" SYP POST	6" X 6" SYP POST	3 PLY X 6 # 1 SYP	4 PLY X 6 # 1 SYP	3 PLY X 8 # 1 SYP
8	30	10	40	=	9.12 KIPS	4" X 6" SYP POST	4" X 6" SYP POST	6" X 6" SYP POST	6" X 6" SYP POST	3 PLY X 6 # 1 SYP	4 PLY X 6 # 1 SYP	3 PLY X 8 # 1 SYP
8	32	10	40	=	9.73 KIPS	4" X 6" SYP POST	4" X 6" SYP POST	6" X 6" SYP POST	6" X 6" SYP POST	3 PLY X 6 # 1 SYP	4 PLY X 6 # 1 SYP	3 PLY X 8 # 1 SYP
8	34	10	40	=	10.34 KIPS	4" X 6" SYP POST	4" X 6" SYP POST	6" X 6" SYP POST	6" X 6" SYP POST	3 PLY X 6 # 1 SYP	4 PLY X 6 # 1 SYP	3 PLY X 8 # 1 SYP
8	36	10	40	=	10.94 KIPS	4" X 6" SYP POST	6" X 6" SYP POST	6" X 6" SYP POST	6" X 6" SYP POST	3 PLY X 6 # 1 SYP	4 PLY X 6 # 1 SYP	3 PLY X 8 # 1 SYP
8	38	10	40	=	11.55 KIPS	4" X 6" SYP POST	6" X 6" SYP POST	6" X 6" SYP POST	6" X 6" SYP POST	3 PLY X 6 # 1 SYP	4 PLY X 6 # 1 SYP	3 PLY X 8 # 1 SYP
8	40	10	40	=	12.16 KIPS	4" X 6" SYP POST	6" X 6" SYP POST	6" X 6" SYP POST	6" X 6" SYP POST	3 PLY X 6 # 1 SYP	4 PLY X 6 # 1 SYP	3 PLY X 8 # 1 SYP
8	42	10	40	=	12.77 KIPS	4" X 6" SYP POST	6" X 6" SYP POST	6" X 6" SYP POST	6" X 6" SYP POST	3 PLY X 6 # 1 SYP	4 PLY X 6 # 1 SYP	3 PLY X 8 # 1 SYP
8	44	10	40	=	13.38 KIPS	4" X 6" SYP POST	6" X 6" SYP POST	6" X 6" SYP POST	6" X 6" SYP POST	4 PLY X 6 # 1 SYP	4 PLY X 6 # 1 SYP	3 PLY X 8 # 1 SYP
8	46	10	40	=	13.98 KIPS	4" X 6" SYP POST	6" X 6" SYP POST	6" X 6" SYP POST	6" X 6" SYP POST	4 PLY X 6 # 1 SYP	4 PLY X 6 # 1 SYP	3 PLY X 8 # 1 SYP
8	48	10	40	=	14.59 KIPS	4" X 6" SYP POST	6" X 6" SYP POST	6" X 6" SYP POST	6" X 6" SYP POST	4 PLY X 6 # 1 SYP	4 PLY X 6 # 1 SYP	3 PLY X 8 # 1 SYP
8	50	10	40	=	15.20 KIPS	4" X 6" SYP POST	6" X 6" SYP POST	6" X 6" SYP POST	6" X 6" SYP POST	4 PLY X 6 # 1 SYP	3 PLY X 8 # 1 SYP	3 PLY X 8 # 1 SYP
8	52	10	40	=	15.81 KIPS	4" X 6" SYP POST	6" X 6" SYP POST	6" X 6" SYP POST	6" X 6" SYP POST	4 PLY X 6 # 1 SYP	3 PLY X 8 # 1 SYP	3 PLY X 8 # 1 SYP
8	54	10	40	=	16.42 KIPS	4" X 6" SYP POST	6" X 6" SYP POST	6" X 6" SYP POST	6" X 6" SYP POST	4 PLY X 6 # 1 SYP	3 PLY X 8 # 1 SYP	3 PLY X 8 # 1 SYP
8	56	10	40	=	17.02 KIPS	4" X 6" SYP POST	6" X 6" SYP POST	6" X 6" SYP POST	3 PLY X 6 # 1 SYP	4 PLY X 6 # 1 SYP	3 PLY X 8 # 1 SYP	3 PLY X 8 # 1 SYP
8	58	10	40	=	17.63 KIPS	4" X 6" SYP POST	6" X 6" SYP POST	6" X 6" SYP POST	3 PLY X 6 # 1 SYP	4 PLY X 6 # 1 SYP	3 PLY X 8 # 1 SYP	3 PLY X 8 # 1 SYP
8	60	10	40	=	18.24 KIPS	4" X 6" SYP POST	6" X 6" SYP POST	6" X 6" SYP POST	3 PLY X 6 # 1 SYP	4 PLY X 6 # 1 SYP	3 PLY X 8 # 1 SYP	3 PLY X 8 # 1 SYP
8	62	10	40	=	18.85 KIPS	4" X 6" SYP POST	6" X 6" SYP POST	6" X 6" SYP POST	3 PLY X 6 # 1 SYP	4 PLY X 6 # 1 SYP	3 PLY X 8 # 1 SYP	3 PLY X 8 # 1 SYP
8	64	10	40	=	19.46 KIPS	4" X 6" SYP POST	6" X 6" SYP POST	6" X 6" SYP POST	4 PLY X 6 # 1 SYP	4 PLY X 6 # 1 SYP	3 PLY X 8 # 1 SYP	4 PLY X 8 # 1 SYP
8	66	10	40	=	20.06 KIPS	4" X 6" SYP POST	6" X 6" SYP POST	6" X 6" SYP POST	4 PLY X 6 # 1 SYP	3 PLY X 8 # 1 SYP	3 PLY X 8 # 1 SYP	4 PLY X 8 # 1 SYP
8	68	10	40	=	20.67 KIPS	4" X 6" SYP POST	6" X 6" SYP POST	6" X 6" SYP POST	4 PLY X 6 # 1 SYP	3 PLY X 8 # 1 SYP	3 PLY X 8 # 1 SYP	4 PLY X 8 # 1 SYP
8	70	10	40	=	21.28 KIPS	4" X 6" SYP POST	6" X 6" SYP POST	6" X 6" SYP POST	4 PLY X 6 # 1 SYP	3 PLY X 8 # 1 SYP	3 PLY X 8 # 1 SYP	4 PLY X 8 # 1 SYP
8	72	10	40	=	21.89 KIPS	4" X 6" SYP POST	6" X 6" SYP POST	6" X 6" SYP POST	4 PLY X 6 # 1 SYP	3 PLY X 8 # 1 SYP	3 PLY X 8 # 1 SYP	4 PLY X 8 # 1 SYP
8	74	10	40	=	22.50 KIPS	6" X 6" SYP POST	6" X 6" SYP POST	6" X 6" SYP POST	4 PLY X 6 # 1 SYP	3 PLY X 8 # 1 SYP	3 PLY X 8 # 1 SYP	4 PLY X 8 # 1 SYP
8	76	10	40	=	23.10 KIPS	6" X 6" SYP POST	6" X 6" SYP POST	6" X 6" SYP POST	4 PLY X 6 # 1 SYP	3 PLY X 8 # 1 SYP	3 PLY X 8 # 1 SYP	4 PLY X 8 # 1 SYP
8	78	10	40	=	23.71 KIPS	6" X 6" SYP POST	6" X 6" SYP POST	6" X 6" SYP POST	4 PLY X 6 # 1 SYP	3 PLY X 8 # 1 SYP	3 PLY X 8 # 1 SYP	4 PLY X 8 # 1 SYP
8	80	10	40	=	24.32 KIPS	6" X 6" SYP POST	6" X 6" SYP POST	3 PLY X 6 # 1 SYP	4 PLY X 6 # 1 SYP	3 PLY X 8 # 1 SYP	3 PLY X 8 # 1 SYP	4 PLY X 8 # 1 SYP
8	82	10	40	=	24.93 KIPS	6" X 6" SYP POST	6" X 6" SYP POST	3 PLY X 6 # 1 SYP	4 PLY X 6 # 1 SYP	3 PLY X 8 # 1 SYP	3 PLY X 8 # 1 SYP	4 PLY X 8 # 1 SYP
8	84	10	40	=	25.54 KIPS	6" X 6" SYP POST	6" X 6" SYP POST	3 PLY X 6 # 1 SYP	4 PLY X 6 # 1 SYP	3 PLY X 8 # 1 SYP	3 PLY X 8 # 1 SYP	4 PLY X 8 # 1 SYP
8	86	10	40	=	26.14 KIPS	6" X 6" SYP POST	6" X 6" SYP POST	3 PLY X 6 # 1 SYP	4 PLY X 6 # 1 SYP	3 PLY X 8 # 1 SYP	4 PLY X 8 # 1 SYP	4 PLY X 8 # 1 SYP
8	88	10	40	=	26.75 KIPS	6" X 6" SYP POST	6" X 6" SYP POST	3 PLY X 6 # 1 SYP	4 PLY X 6 # 1 SYP	3 PLY X 8 # 1 SYP	4 PLY X 8 # 1 SYP	4 PLY X 8 # 1 SYP
8	90	10	40	=	27.36 KIPS	6" X 6" SYP POST	6" X 6" SYP POST	3 PLY X 6 # 1 SYP	4 PLY X 6 # 1 SYP	3 PLY X 8 # 1 SYP	4 PLY X 8 # 1 SYP	4 PLY X 8 # 1 SYP
8	92	10	40	=	27.97 KIPS	6" X 6" SYP POST	6" X 6" SYP POST	3 PLY X 6 # 1 SYP	4 PLY X 6 # 1 SYP	3 PLY X 8 # 1 SYP	4 PLY X 8 # 1 SYP	4 PLY X 8 # 1 SYP
8	94	10	40	=	28.58 KIPS	6" X 6" SYP POST	6" X 6" SYP POST	3 PLY X 6 # 1 SYP	4 PLY X 6 # 1 SYP	3 PLY X 8 # 1 SYP	4 PLY X 8 # 1 SYP	4 PLY X 8 # 1 SYP
8	96	10	40	=	29.18 KIPS	6" X 6" SYP POST	6" X 6" SYP POST	4 PLY X 6 # 1 SYP	3 PLY X 8 # 1 SYP	3 PLY X 8 # 1 SYP	4 PLY X 8 # 1 SYP	X
8	98	10	40	=	29.79 KIPS	6" X 6" SYP POST	6" X 6" SYP POST	4 PLY X 6 # 1 SYP	3 PLY X 8 # 1 SYP	3 PLY X 8 # 1 SYP	4 PLY X 8 # 1 SYP	X

Chart data is based on the Perma-Column Design and Use Guide table 7.1

NOTE: A 3 ply x 6" #1 SYP column can be used to replace a 4" x 6" or 6" x 6" post